Oblivious and Out-of-Band Relaying for Interference Networks

O. Simeone (NJIT), E. Erkip (Poly-NYU) and S. Shamai (Technion)

ITA, UCSD, Feb. 1, 2010

Motivation

- Standard assumptions in network-information theory:
  - Design of encoding/ decoding functions (e.g., codebooks) is performed jointly
  - All nodes are potentially aware at all times of the operations carried out by any other node

Motivation: Examples

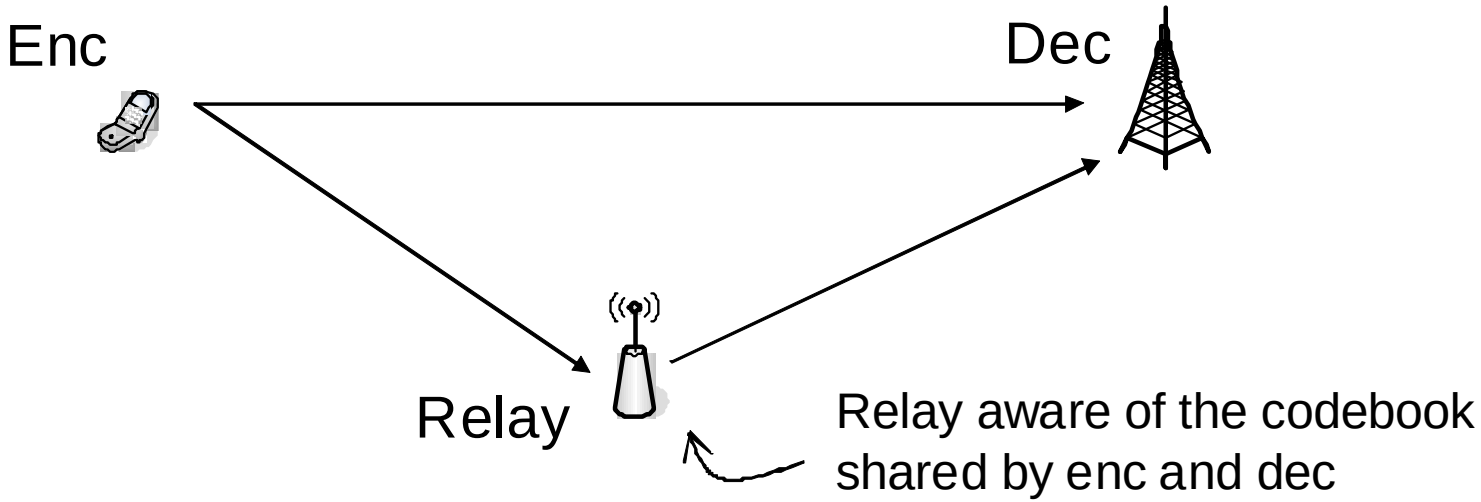

Motivation: Examples

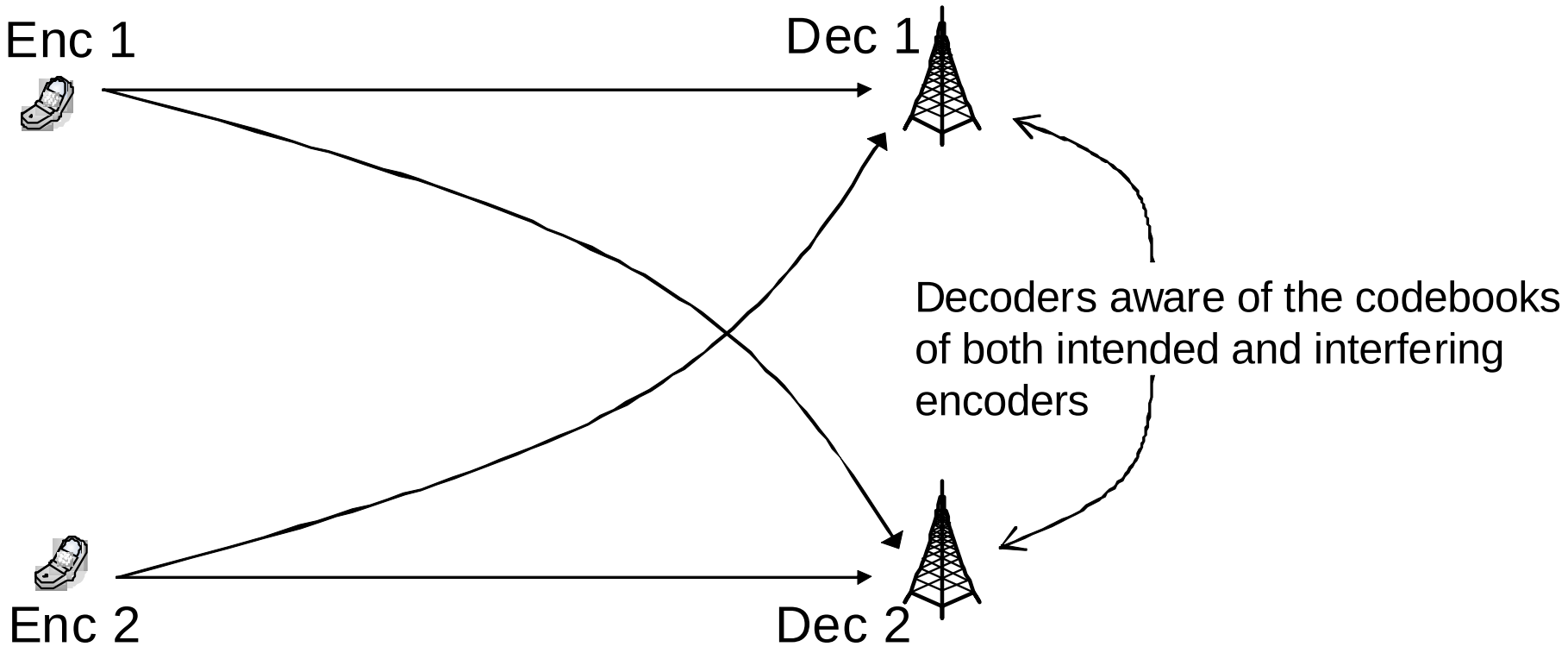

Motivation: Oblivious Processing

- Such full coordination may be impractical in decentralized scenarios
- **... Ultimate performance limits in the absence of full codebook information (oblivious processing)?**
  [Sanderovich et al 08]

Example: Primitive Relay Channel (PRC)

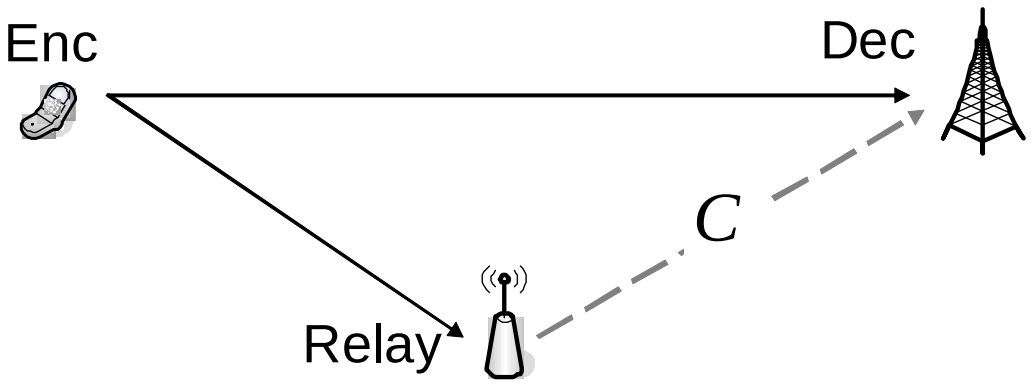

- Out-of-band relay-to-destination link of capacity C [Zhang 88] [Kim 08]
- Relay unaware of encoder's codebook (*oblivious relaying*)

Example: Primitive Interference Relay Channel (PIRC)

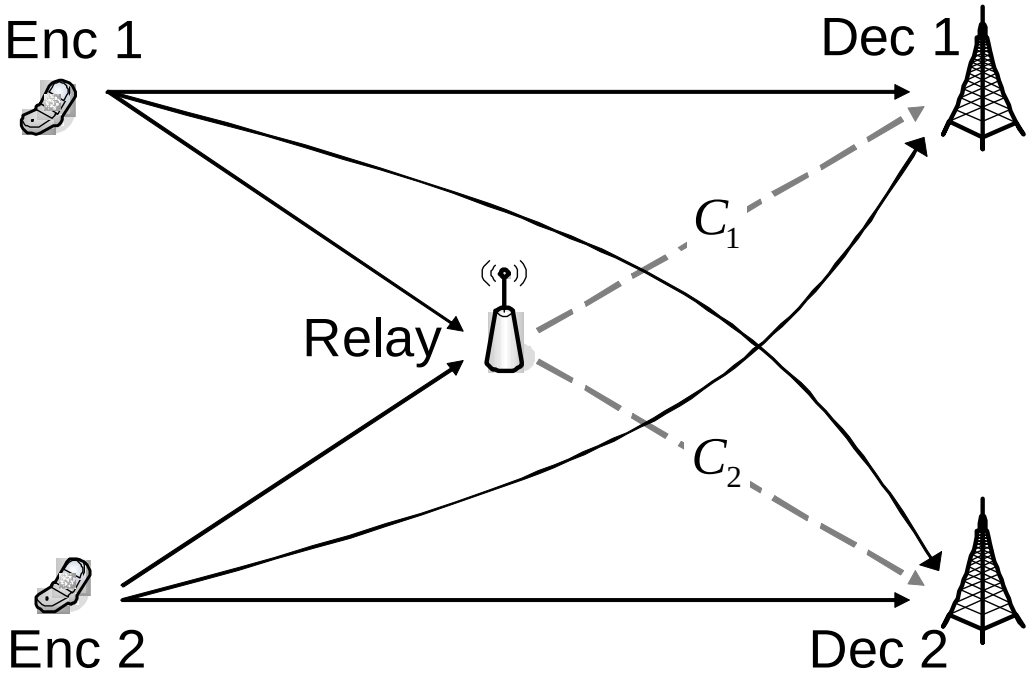

- Relay unaware of encoder's codebook (*oblivious relaying*)
- Decoders unaware of the interferer's codebook (*interference-oblivious decoding*)

Overview

- Review and extend definition of oblivious processing of [Sanderovich et al 08]
- Capacity results:
  - capacity for discrete memoryless PRC with oblivious relaying
  - 1/2-bit capacity approximation for Gaussian memoryless PRC with oblivious relaying
  - capacity region of PIRC with oblivious relaying and decoding
  - sum-capacity of symmetric PIRC with oblivious relaying only
- Application to femtocells

Previous Work

[Sanderovich et al 08] Upper and lower bounds on capacity of primitive multirelay channel *without direct link* and with oblivious relaying

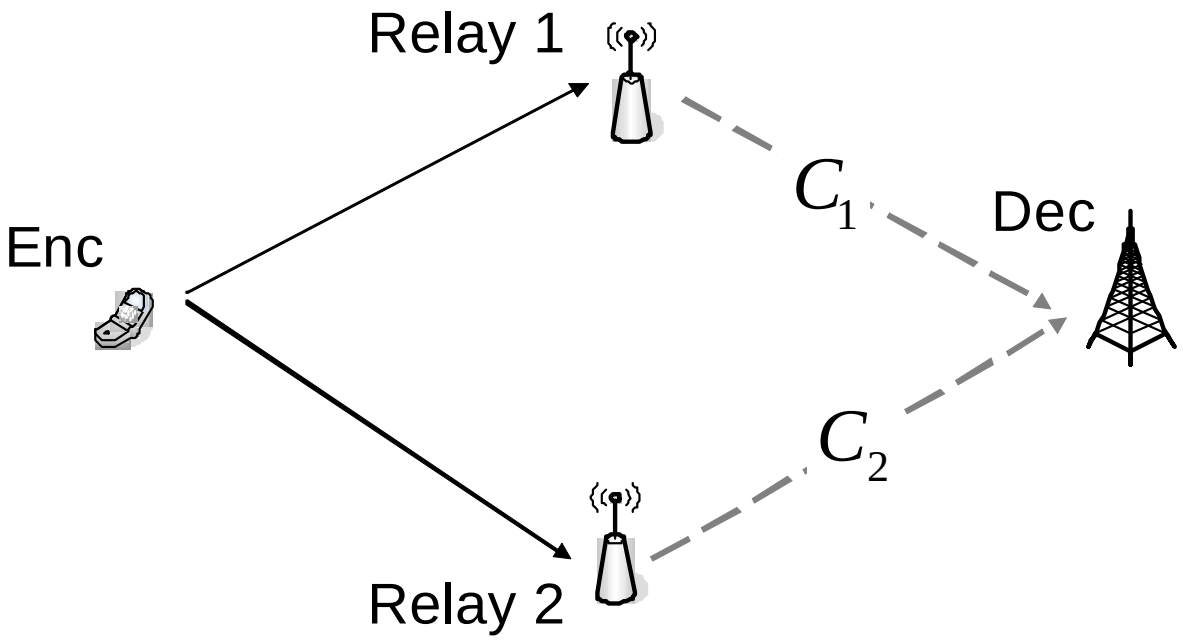

Further studied by [Simeone et al 09]

System Model: Primitive Relay Channel (PRC)

- Discrete memoryless PRC $(\mathcal{X}_1, p(y_1, y_2, y_3|x_1, x_2), \mathcal{Y}, \mathcal{Y}_3, C)$

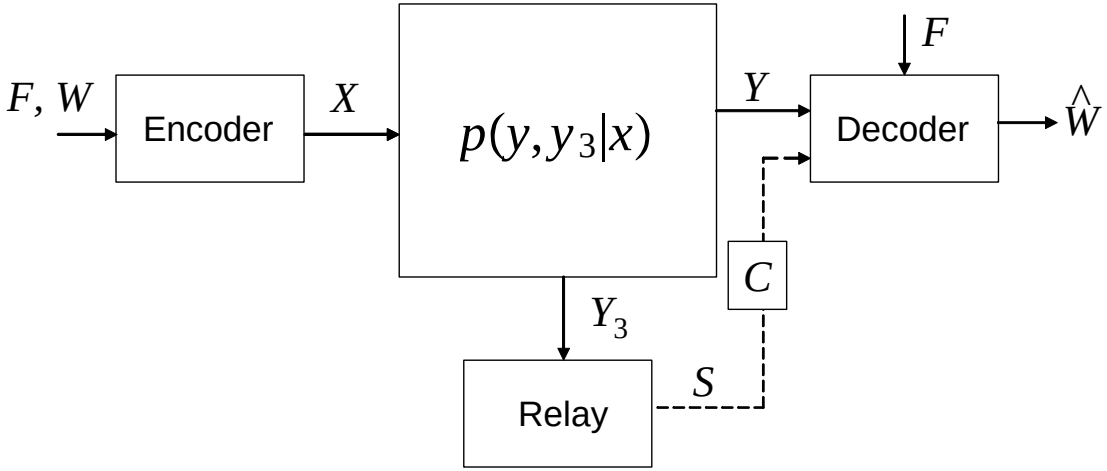

- Gaussian PRC:

$$
\begin{aligned}
Y_{3i} &= \sqrt{\alpha} X_i + N_{3i}, \\
Y_i &= X_i + N_i,
\end{aligned}
$$

with N_{3i}, N_i independent zero-mean unit-power Gaussian, and $1/n \sum_{i=1}^{n} E[X_i^2] \leq P$.

System Model: Primitive Interference Relay Channel (PIRC)

- Discrete memoryless PIRC
  $(\mathcal{X}_1, \mathcal{X}_2, p(y_1, y_2, y_3|x_1, x_2), \mathcal{Y}_1, \mathcal{Y}_2, \mathcal{Y}_3, C_1, C_2)$

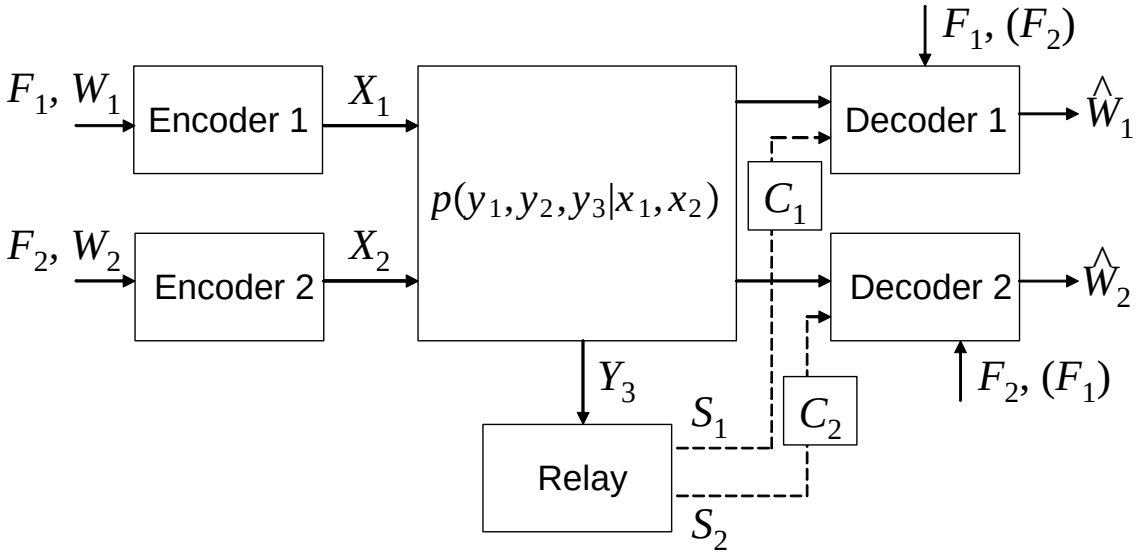

System Model: Oblivious Processing

- Following [Sanderovich et al 08]:
  - Encoding $x^n(F, W)$ dependent on both message W and index F
  - The index $F \in [1, |\mathcal{X}|^{n2^{nR}}]$ identifies the used codebook of rate R [bits/ channel use]

Definition

With oblivious processing, when not conditioning on F, the codeword $x^n(F, W)$ "looks" i.i.d. $\sim p_X(\cdot)$:

$$p_X^n(x^n(F, W)) = \prod_{i=1}^{n} p_X(x_i)$$

(... but $p_X^n(x^n(F = f, W)) \neq \prod_{i=1}^{n} p_X(x_i)$ [Shamai Verdú 97]!)

System Model: Oblivious Processing

1. *Oblivious relaying:* The relay is not aware of both indices F_1 and F_2
2. *Interference-oblivious decoding*: Destination j only knows index F_j and not F_i, $i \neq j$

System Model: Oblivious Processing

- This definition rules out:

- general multiletter input distributions
- time-sharing

- ... but allows all standard "single-letter" coding schemes (superposition coding, rate-splitting, ...)

System Model: Oblivious Processing with Enabled Time-Sharing

- In some scenarios, it may be reasonable to assume that all nodes share a time-sharing sequence $q^n \in \mathcal{Q}^n$
- Encoding/ decoding functions depend on q^n

Definition

Oblivious processing *with enabled time-sharing* requires conditional independence

$$p^n_{X|Q}(x^n(F,W)|q^n) = \prod_{i=1}^{n} p_{X|Q}(x_i|q_i)$$

Achievable Rates

Definition

A rate pair (R_1, R_2) is said to be achievable if there exists a sequence of codes such that $\Pr[(\hat{W}_1, \hat{W}_2) \neq (W_1, W_2)] \to 0$, where the probability is taken with respect to W_1, W_2 and F_1, F_2. The capacity region $\mathcal{C}$ is the closure of the union of all achievable rates

Capacity of PRC with Oblivious Relaying

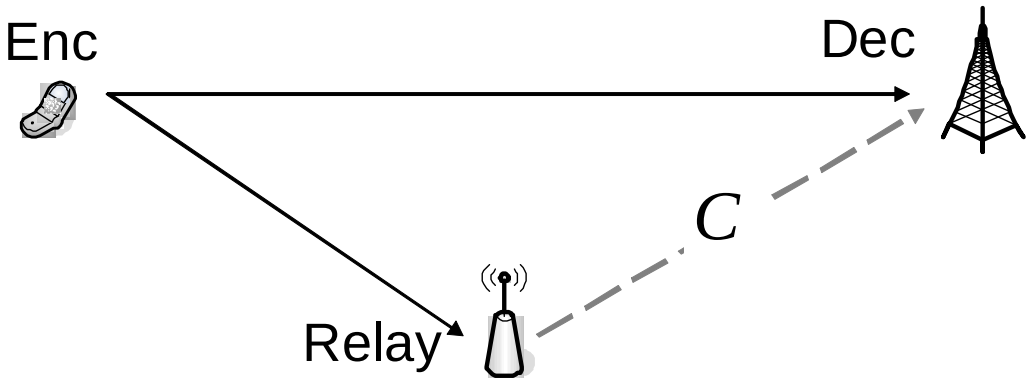

Capacity of PRC with Oblivious Relaying

Theorem

The capacity of a PRC with oblivious relaying and enabled time-sharing is given by

$$\begin{aligned} \mathcal{C} &= \max I(X; Y\hat{Y}_3|Q) \\ s.t.\ C &\geq I(Y_3; \hat{Y}_3|YQ) \end{aligned}$$

where maximization is taken with respect to the distribution $p(q)p(x|q)p(\hat{y}_3|y_3, q)$ *and the mutual informations are evaluated with respect to*

$$p(q)p(x|q)p(\hat{y}_3|y_3, q)p(y, y_3|x).$$

If time-sharing is not allowed, the above is still an upper bound on the capacity, and setting $Q =$*const leads to an achievable rate.*

Capacity of PRC with Oblivious Relaying: Sketch of Proof

- *Achievability:* CF with time-sharing [El Gamal et al 06]
- *Converse*:
  - The destination knows F and $\tilde{Q} = q^n$: $H(W|Y^n SF\tilde{Q}) \leq n\epsilon_n$ with $\epsilon_n \to 0$
  - The relay does not know F: $nC \geq H(\text{relay-to-destination message}(S)|\tilde{Q})$...
  - Proof based on conditional independence of X^n given $\tilde{Q}$
  - $\hat{Y}_{3i} = [SX^{i-1}Y_3^{i-1}Y^{i-1}Y_{i+1}^n]$ (compare with Wyner-Ziv: $[SY^{i-1}Y_{i+1}^n]$)

Some Discussion

- Optimality of CF follows from the assumption of oblivious relaying
- In [Sanderovich et al 08] (multirelay channel without direct link) optimality of (distributed) CF strategies remains elusive (as for the corresponding *source coding* problem, CEO problem)
- Time-sharing in general necessary to achieve capacity

Gaussian PRC

- Optimization of input distribution $p(q)p(x|q)p(\hat{y}_3|y_3, q)$ in Proposition 1 open problem
  - Gaussian input distribution is generally not optimal [Sanderovich et al 08]
  - Non-Gaussian test channels may be advantageous [Dabora Servetto 08]

Theorem

The rate achievable via CF (and hence oblivious relaying)

$$R_{CF} = \frac{1}{2}\log_2\left(1 + P + \frac{\alpha P}{1 + \frac{1+P+\alpha P}{(2^{2C}-1)(P+1)}}\right)$$

on the Gaussian PRC, by employing Gaussian channel inputs, Gaussian test channel and no time-sharing, is at most half bit away from the capacity of the PRC with codebook-aware (and thus also oblivious) relaying.

Gaussian PRC

Proof: The proof is obtained by comparing the achievable rate above with the cut-set bound upper bound (which holds even with non-oblivious relaying)

$$R_{UB} = \min\left\{\frac{1}{2}\log_2\left(1+P\right)+C,\ \frac{1}{2}\log_2\left(1+\alpha P+P\right)\right\}.$$

Primitive Interference Relay Channel

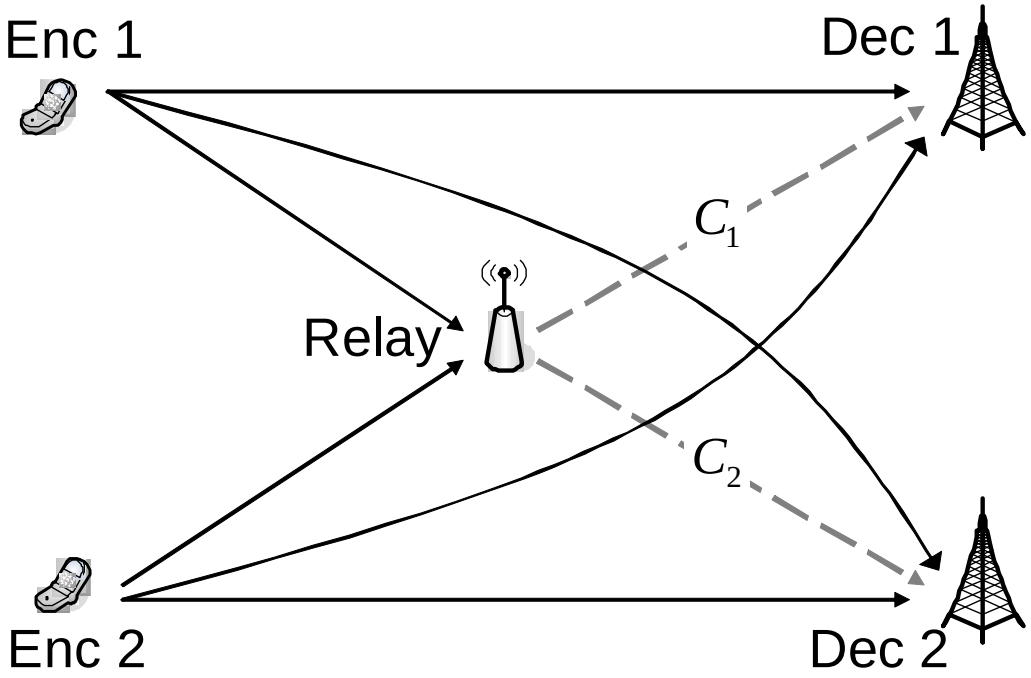

Primitive Interference Relay Channel

Theorem

The capacity region of the PIRC with oblivious relaying, interference-oblivious decoding and enabled time-sharing is given by the set of all non-negative pairs (R_1, R_2) *that satisfy*

$$R_j \leq I(X_j; Y_j \hat{Y}_3^{(j)} | Q), \text{ for } j = 1, 2,$$

for some distribution $p(q) \prod_{j=1}^{2} p(x_j|q) p(\hat{y}_3^{(j)}|y_3, q) p(y_1, y_2|x_1, x_2)$ *that satisfy*

$$C_j \geq I(Y_3; \hat{Y}_3^{(j)} | Y_j Q) \text{ for } j = 1, 2.$$

If time-sharing is not enabled, the above is an outer bound and setting $Q =$*const leads to an achievable rate region.*

Primitive Interference Relay Channel: Sketch of Proof

Achievability: Relay employs CF and the destinations treats the interfering signal as noise
Converse: Similar to Proposition 1

Primitive Interference Relay Channel

Definition: A symmetric PIRC is defined by (i) $p_{Y_1,Y_3|X_1X_2}(\cdot, y_3|x_1, x_2) = p_{Y_2,Y_3|X_1X_2}(\cdot, y_3|x_1, x_2)$ [Carleial 78]; (ii) The relay is constrained to send $S_1 = S_2$.

Theorem

The sum-capacity of the symmetric PIRC and of the PMARC with oblivious relaying, interference-aware decoding and enabled time-sharing is given by

$$\begin{aligned} \mathcal{C}_{sum} &= \max I(X_1X_2; Y_1\hat{Y}_3|Q) \\ s.t.\ C &\geq I(Y_3; \hat{Y}_3|Y_1Q) \end{aligned}$$

where maximization is taken with respect to the distribution $p(q)p(x_1|q)p(x_2|q)p(\hat{y}_3|y_3, q)$ *and the mutual informations are evaluated with respect to*

$$p(q)p(x_1|q)p(x_2|q)p(\hat{y}_3|y_3, q)p(y_1, y_3|x_1, x_2).$$

Primitive Interference Relay Channel: Sketch of Proof

Proof: The model is equivalent to a primitive multiple access relay channel (PMARC)...

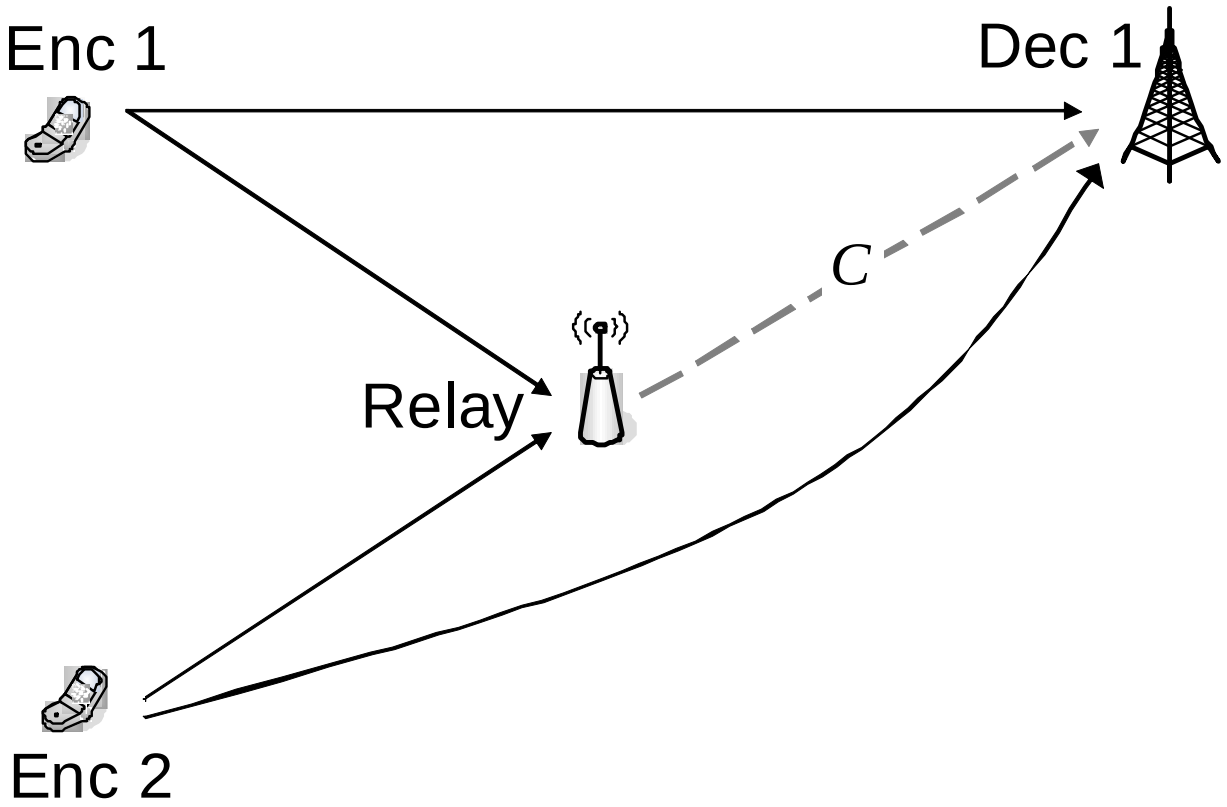

Application: Femtocells as Primitive Relays

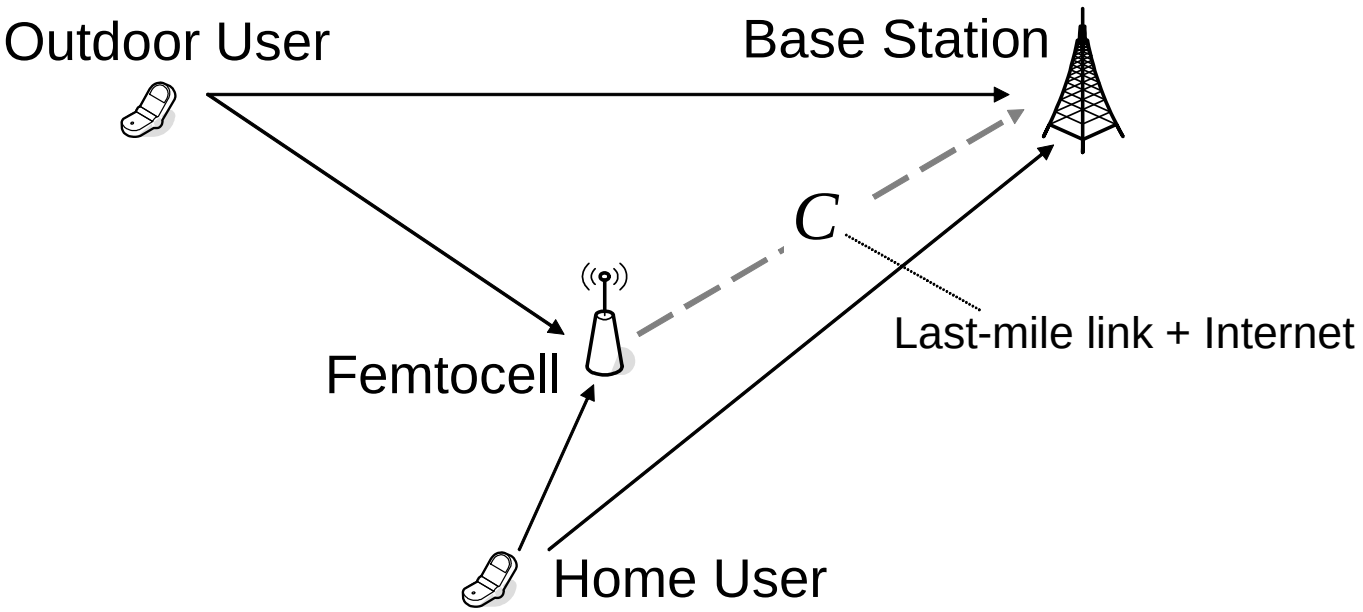

- Closed-Access femtocells: Relay only for home user
- Open-Access femtocells: Relay for both outdoor and home user

Conclusions

- Oblivious Processing: Constraint on codebook state information
- Primitive Relaying: Out-of-band relay-to-destination link
- Derived capacity results for primitive relay and interference channels
- Application to femtocell
- Future work: capacity region of PMARC, in-band relaying,...