Line Coding for Differential Vector Signaling

Ezio Biglieri
Departament TIC
Universitat Pompeu Fabra, Barcelona, Spain
Email: e.biglieri@ieee.org

Emanuele Viterbo
Department of Electrical and Computer Systems Engineering
Monash University, Melbourne, Australia
Email: emanuele.viterbo@monash.edu

***Abstract*—We collect some observations on line coding schemes obtained from a subset of a Permutation Modulation signal set. In particular, we discuss design techniques and develop a tool for performance analysis.**

I. Introduction and motivation of the work

Transmission on parallel wireline links (as those used to interconnect integrated circuits, or a television set to a set-top box) is affected by disturbances which place a number of constraints on the design of the signaling scheme. The key problem here is the design of line codes allowing the transmission of b bits over $w \geq b$ wires and subject to constraints to be detailed later. The general scheme is shown in Fig. 1. Here, b binary information symbols ± 1 are input

Fig. 1. *General scheme of vector coding.*

in parallel to the (w, b) line encoder, which is an injective map $\mathcal{L} : \{\pm 1\}^b \mapsto \mathbb{R}^w$. It outputs a vector $\mathbf{w}$ with w real components. Vector $\mathbf{y}$, the noisy version of $\mathbf{w}$, is processed by a receiver which outputs an estimate $\widehat{\mathbf{b}}$ of the information vector.

The single-ended $(1, 1)$ line-encoding scheme that uses one wire per link, while all links share a ground signal for return current, is the simplest choice, and, with binary signaling, has a *pin efficiency* $b/w = 1$ bit/pin. This scheme, which associates binary data with voltage levels V and 0, wastes half of the transmitted power in a dc component, and, requiring the use of a reference level for detection, makes the system sensitive to common-mode noise sources like power supply noise and crosstalk. With $(2, 1)$ binary *differential signaling* (DS), each link needs two wires, and, since detection requires no reference level, is insensitive to common-mode disturbances. In addition, simultaneous switching noise (SSN), caused by the variations of power supply current, is virtually zero in DS because the total power supply current is constant (see, e.g., [1], [4] for further details). However, differential signaling reduces the pin efficiency to 0.5 bit/pin. Recent work (partially listed in the References section) has focused on the design of signaling schemes that retain the advantages of DS while increasing its pin efficiency.

A. Baseline scheme: binary differential signaling

Assume, without loss of generality, that the signal transmitted over a couple of wires is $(A, -A)$ with $A > 0$. The signal received on the pair of wires after the addition of white Gaussian noise is $(A + n_1, -A + n_2)$, with $n_i \sim \mathcal{N}(0, N_0/2)$ and n_1 independent of n_2. The maximum-likelihood (ML) detector observes the sign of the difference $2A + n_{12}$, where $n_{12} \triangleq n_1 - n_2 \sim \mathcal{N}(0, N_0)$. The probability of error is the probability that $2A + n_{12} < 0$, and is given by

$$P(e) = \mathrm{Q}\Big(\sqrt{2\eta}\Big) \tag{1}$$

where $\eta \triangleq 2A^2/N_0$ is the ratio between the total transmitted energy per bit and the noise power spectral density.

II. Vector signaling

A scheme based on a number of wires greater than 2 and having a pin efficiency $2/3$ bit/pin was advocated in [7]. This scheme was generalized by Abbasfar in [1], where a multiwire ("vector") DS scheme using w wires was designed. Under the assumption that the transmitted amplitudes are ± 1, the number of $+1$ (and hence of -1) in all transmitted vectors is constant, which makes this signaling scheme "balanced," and hence insensitive to SSN. An example of this *generalized differential vector signaling* scheme is provided by the following set of 6 vectors (the codebook) used for transmission of $\log_2 6$ bits over $w = 4$ wires:

$$\begin{array}{cccc} (+1, & -1, & +1, & -1) \\ (-1, & +1, & +1, & -1) \\ (-1, & -1, & +1, & +1) \\ (+1, & -1, & -1, & +1) \\ (-1, & +1, & -1, & +1) \\ (+1, & +1, & -1, & -1) \end{array} \tag{2}$$

Vectors (2) form a Variant-I permutation modulation (PM) set [10], [11], obtained as the set of all the permutations of an initial vector $(-1, -1, +1, +1)$. A peculiar feature of PM is that optimum (ML) detection over the additive white Gaussian noise (AWGN) channel is obtained by ordering the received vector in decreasing order of its entries, and choosing the transmitted vector whose order matches that of the observed vector. Thus, the optimum receiver can be thought of as the combination of $\binom{w}{2}$ comparators (obtaining the signs of all pairwise differences between wire voltage levels) followed by a lookup table (notice also that the requirement of balanced

vectors in the codebook words leads to the optimality of the PM scheme, as shown in [2]).

A. Introducing reduced-complexity vector signaling

Consider, for illustration's sake, the PM codebook with 6 vectors and 3 components each, obtained by permuting the initial vector $(-1, 0, 1)$. We denote by $i{:}j$ the sign of the difference between vector components i and j.

	vector	1:2	2:3	1:3
①	$(-1, 0, 1)$	$-$	$-$	$-$
②	$(-1, 1, 0)$	$-$	$+$	$-$
③	$(0, -1, 1)$	$+$	$-$	$-$
④	$(1, 0, -1)$	$+$	$+$	$+$
❺	$(0, 1, -1)$	$-$	$+$	$+$
❻	$(1, -1, 0)$	$+$	$-$	$+$

(3)

If all 6 vectors are retained in the codebook, then 3 comparisons are needed for ML detection. However, if vectors ❺ and ❻ are not used, then we are left with 4 vectors that can be identified by using only *two* comparisons, viz., 1:2 and 2:3. We obtain a $(3, 2)$ line code requiring, for ML detection, only the observation of 1:2 and 2:3. However, we hasten to observe that, while with the full-PM codebook including all 6 permutations the comparisons 1:2, 2:3, and 1:3 can be used to generate ML decisions, with the reduced codebook ①–④ the ensuing decisions *may not* be ML anymore. This situation can be illustrated with the help of Fig. 2. This is generated as follows: with the coordinate transformation using orthogonal matrix [6]

$$\mathbf{A} = \begin{bmatrix} 1+b & b & 1/\sqrt{3} \\ b & 1+b & 1/\sqrt{3} \\ 1/\sqrt{3} & 1/\sqrt{3} & 1/\sqrt{3} \end{bmatrix} \tag{4}$$

where $b \triangleq -1/(3-\sqrt{3})$, the codebook vectors are transformed into vectors whose third component is zero, thus reducing the codebook representation to a two-dimensional space. A further rotation by $\pi/12$ generates the point constellation depicted in Fig. 2, which is seen to be a 6PSK. The square-distance spectrum of this set is $\{2, 2, 6, 6, 8\}$, uniform across vectors. The removal of ❺-❻ yields a signal set whose square-distance spectrum is not uniform: it is $\{2, 2, 8\}$ for signal ①, $\{2, 6, 6\}$ for signals ② and ③, and $\{6, 6, 8\}$ for signal ④. ML decision regions are delimited by the dashed lines. These partially differ from the dotted lines delimiting the regions associated with comparisons 1:2 and 2:3. In particular, comparison 2:3 separates the plane into two half-planes, corresponding to 2:3 $= +1$ (signals ② and ④) and 2:3 $= -1$ (signals ① and ③). Similarly, comparison 1:2 separates the plane into two half-planes, corresponding to 1:2 $= +1$ (signals ③ and ④) and 1:2 $= -1$. (signals ① and ②). One can see that, while the pairwise decision between ① and ② (or between ① and ③) is delimited by the same line with both decision rules (and consequently the error probability conditioned on the transmission of ① is the same for both decision rules), this

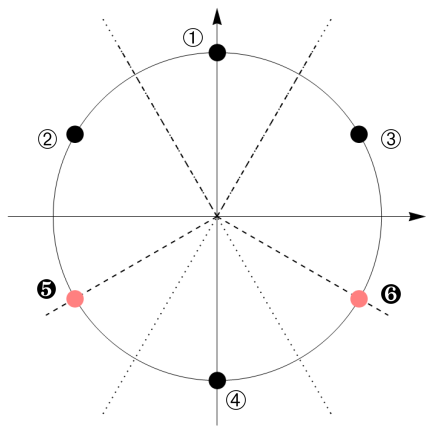

Fig. 2. *2-dimensional representation of codebook* (3). *Dashed lines: Separators of ML decision regions. Dotted lines: Separators of decision regions based on comparisons* 1:2 *and* 2:3.

does not occur for the pairwise decision between ② and ④ (or between ③ and ④). This is due to the fact that ② and ❺ (and ③ and ❻) are indistinguishable under the non-ML strategy.

Fig. 3 shows the word error probability of this line code. Here η is the signal-to-noise ratio, defined as the ratio of the energy per bit (equal to 1 in this case) to the AWGN power spectral density N_0.

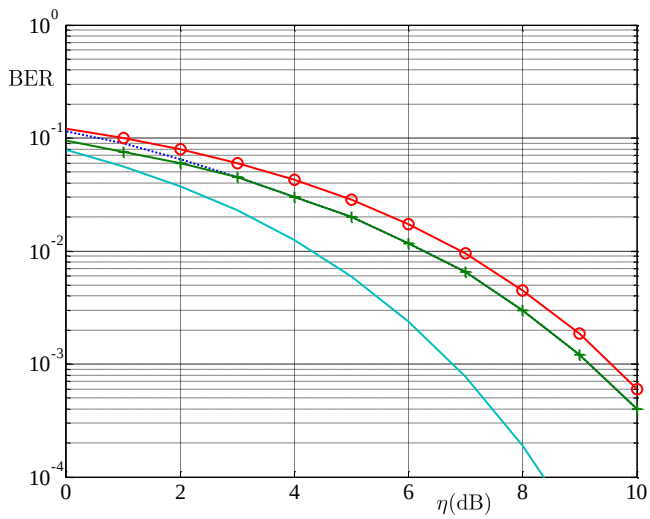

Fig. 3. *Bit error rates vs.* $\eta \triangleq \mathcal{E}_b/N_0$. *Circle markers: Decisions based on comparisons* 1:2 *and* 2:3 *for the* 4*-signal codebook* (3) *(computer simulation). Plus markers: ML decisions for the same codebook (computer simulation). Dotted line: Upper union bound for the same codebook. Lowermost line: Binary differential signaling.*

B. Reduced-complexity codebooks

Generalizing this simple example, one may derive a rationale for the design of reduced-complexity vector-signaling schemes [8]. A vector set, derived from Permutation Modulation but entailing a lower complexity (as measured in terms of the number of comparators needed) can be obtained as

follows. Starting from a PM signal set $\mathcal{S}$, a subset of $\nu < \binom{w}{2}$ comparators is selected, and a subset of $\mathcal{S}$ with 2^ν elements is derived which can be detected using only those comparators. Specifically, constructing a table as in (3), one would retain only the vectors corresponding to all different ν-tuples of values of $i{:}j$.

This design procedure can sometimes be improved after observing that the reliability of the decisions based on signs of comparisons depends on the actual values of the differences between vector components. In fact, due to the presence of noise, the error probability is lower if this difference is higher (more on this in Section III). Thus, it might be convenient to combine differences so as to obtain large values for the variables involved in the decisions. A simple design will illustrate this concept.

Consider the PM scheme based on all the permutations of the initial vector $(-1, 0, 0, 1)$. There are 12 of these. Suppose one wants to retain only 4 permuted vectors. As shown in (5), this can be done by computing the differences $1-2$ and $1-3$ (which do not involve the fourth component of the vectors) or the differences $1-2$ and $2-4$.

	vector	1-2	1-3	1-4	2-3	2-4	3-4
①	$(-1,0,0,1)$	-1	-1	-2	0	-1	-1
②	$(1,0,0,-1)$	1	1	2	0	1	1
③	$(0,-1,1,0)$	1	-1	0	-2	-1	1
④	$(0,1,-1,0)$	-1	1	0	2	1	-1

(5)

Another possible choice consists of choosing a sum of two differences, as shown in (6), which yields values ± 2 for the differences and hence, apparently, more noise protection.

	vector	(1-2)+(3-4)	(1-3)+(2-4)
①	$(-1,0,0,1)$	-2	-2
②	$(1,0,0,-1)$	2	2
③	$(0,-1,1,0)$	2	-2
④	$(0,1,-1,0)$	-2	2

(6)

III. Orthogonal vector signaling

Differential vector codebooks can also be obtained, as advocated in [4], [5], [8], [9], by generating the codebook, as well as the differences needed for detection, through linear transformations. An immediate constraint imposed by the linearity of the transformation between the information vector, whose components are all the b-tuples with entries ± 1, and the codebook, is that the latter contains, along with vector $\mathbf{w}$, also vector $-\mathbf{w}$. For illustration's sake, we carry out an example of a "linear" design obtained by modifying the one described in II-A. Consider the vector set (7), where in the codebook each vector is paired with its additive inverse.

	vector	1-2	1-3	2-3	(1-2) + (1-3)
①	$(1,-1,0)$	2	1	-1	3
②	$(-1,1,0)$	-2	-1	1	-3
③	$(1,0,-1)$	1	2	1	3
④	$(-1,0,1)$	-1	-2	-1	-3

(7)

It is seen that the transmitted code vector can be uniquely identified by 1:2 and 2:3. However, this choice would lead to *four* different values of the differences fed to the first slicer, i.e., $\{\pm 1, \pm 2\}$. This would make the detection scheme more susceptible to intersymbol interference than a scheme where only two antipodal values are fed to the slicer [4]. Based on this observation, one may rather choose to identify the code vector using the sign of differences $(1-2)+(1-3)$ and $2-3$ (see Table (7)). The resulting codebook is geometrically uniform, which implies that the square-distance spectrum $\{2, 6, 8\}$ be the same across all vectors. In addition, the codebook enjoys the property that the decisions based on the signs of the differences as above coincide with the ML decision regions, and hence the former decision rule is optimum (see Fig. 4 for an illustration). The plot of error probability of both detection rules is essentially indistinguishable from the ML curve of Fig. 3.

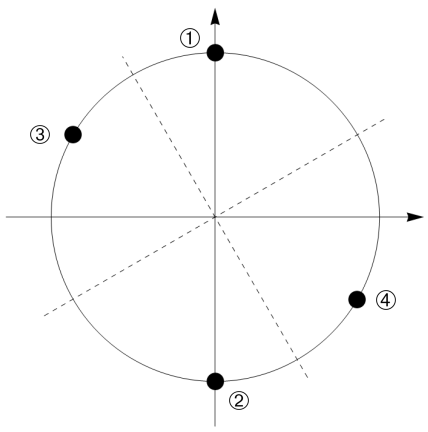

Fig. 4. 2-*dimensional representation of codebook* (7). *Dashed lines: Separators of ML decision regions and of decision regions based on the signs of* $(1-2)+(1-3)$ *and of* $2-3$.

A geometric interpretation of this signaling scheme (to be expanded upon in [3]), is based on the observation that the codebook signals of Fig. 4, after an inessential phase rotation, are the vertices of a rectangle whose edges are parallel to the coordinate axes. Thus, ML detection on the AWGN channel is reduced to independent detection of the signs of the components of the signal vector.

A. Linear generation and detection

A vector signaling scheme transmitting b bits on w wires, with $w = b+1$ and based on linear generation and detection, was described in [5]. The $2^b \times w$ "source" matrix $\mathbf{B}$ has as

rows all the b-tuples with elements ± 1 and a 0 prepended. A $w \times w$ coding matrix $\mathbf{K}$ generates the line codebook as the $2^b \times w$ matrix

$$\mathbf{W} = \varepsilon \mathbf{B}\mathbf{K} \tag{8}$$

where the scalar coefficient $\varepsilon > 0$ may chosen so as to have all the entries of $\mathbf{W}$ in the interval $[-1, 1]$. In addition, the constraint $\sum_{j=1}^{b} w_{i,j} = 0$, corresponding to having balanced currents in each wire, should be satisfied for all $i = 1, \ldots, 2^b$. Detection, i.e., the generation of the relevant differences between the components of the columns of $\mathbf{W}$, is done using a $w \times w$ matrix $\mathbf{M}$ with the property

$$\mathbf{D} \triangleq \mathbf{K}\mathbf{M}^{\mathsf{T}} = \mathrm{diag}(d_1, \ldots, d_w) \tag{9}$$

where a superscript T denote transpose, and $d_i > 0$, $i = 1, \ldots, w$. Moreover, it is assumed that $\mathbf{M}\mathbf{M}^{\mathsf{T}}$ is a diagonal matrix:[1]

$$\mathbf{M}\mathbf{M}^{\mathsf{T}} = \mathrm{diag}(\mu_1^2, \ldots, \mu_w^2) \tag{10}$$

Thus, detection is obtained from the operation

$$\mathbf{W}\mathbf{M}^{\mathsf{T}} = \varepsilon \mathbf{B}\mathbf{K}\mathbf{M}^{\mathsf{T}} = \varepsilon \mathbf{B}\mathbf{D} \tag{11}$$

which, in the absence of noise, yields

$$\mathrm{sgn}(\mathbf{W}\mathbf{M}^{\mathsf{T}}) = \mathrm{sgn}(\varepsilon \mathbf{B}\mathbf{D}) = \mathrm{sgn}(\mathbf{B}) = \mathbf{B} \tag{12}$$

as it should be. Notice that the entries of $\mathbf{W}\mathbf{M}^{\mathsf{T}}$ in columns 2 to w measure the vertical opening of the eye pattern before the slicer, and hence provide a rough estimate of the noise sensitivity of line-encoded signals (this point will be discussed later).

B. Error probabilities

In the presence of noise we receive the noisy codebook matrix $\mathbf{W} + \mathbf{N}$, where $\mathbf{N}$ is a $2^b \times w$ matrix whose entries are independent Gaussian random variables $\sim \mathcal{N}(0, N_0/2)$. Detection generates, according to (11)-(12),

$$(\mathbf{W} + \mathbf{N})\mathbf{M}^{\mathsf{T}} = \varepsilon \mathbf{B}\mathbf{D} + \mathbf{N}\mathbf{M}^{\mathsf{T}} \tag{13}$$

The jth symbol associated with source b-tuple i ($i = 1, \ldots, 2^b$, $j = 2, \ldots, w$) is erroneously detected if its polarity is altered by noise, which we write, assuming that the noise is independent of the transmitted b-tuple and hence depends only on the wire on which transmission is taking place, in the form

$$(p_{\mathrm{e}})_{i,j} = \mathbb{P}\left(n_j < -\varepsilon \left|(\mathbf{B}\mathbf{D})_{i,j}\right|\right) \tag{14}$$

where $n_j \sim \mathcal{N}(0, \sigma_j^2)$, and $\sigma_j^2 \triangleq (N_0/2)\mu_j^2$ is the jth element of the diagonal covariance matrix of the noise term in (13):

$$\mathbb{E}\left[(\mathbf{N}\mathbf{M}^{\mathsf{T}})^{\mathsf{T}}(\mathbf{N}\mathbf{M}^{\mathsf{T}})\right] = \mathbf{M}\left[\mathbb{E}(\mathbf{N}^{\mathsf{T}}\mathbf{N})\right]\mathbf{M}^{\mathsf{T}} \tag{15}$$

$$= \frac{N_0}{2}\mathrm{diag}(\mu_1^2, \ldots, \mu_w^2) \tag{16}$$

Thus,

$$(p_{\mathrm{e}})_{i,j} = \mathrm{Q}\left(\frac{\varepsilon \left|(\mathbf{B}\mathbf{D})_{i,j}\right|}{\sqrt{N_0/2}\mu_j}\right) \tag{17}$$

[1]Observe that if $\mathbf{K}\mathbf{K}^{\mathsf{T}}$ is a diagonal matrix, then one can choose $\mathbf{M} = \mathbf{L}\mathbf{K}$, with $\mathbf{L}$ a diagonal matrix.

We may define the signal-to-noise ratio η observing that the average energy associated with the transmission of a signal b-tuple is given by

$$\mathcal{E} = \frac{\|\mathbf{W}\|^2}{2^b} \tag{18}$$

where $\|\mathbf{W}\|$ denotes the Frobenius norm of matrix $\mathbf{W}$. The energy per bit is consequently $\mathcal{E}_b = \mathcal{E}/b$, and the signal-to-noise ratio is

$$\eta \triangleq \frac{\mathcal{E}_b}{N_0} = \frac{\|\mathbf{W}\|^2/2^b}{bN_0} \tag{19}$$

Thus, we can rewrite (17) in the form

$$(p_{\mathrm{e}})_{i,j} = \mathrm{Q}\left(\alpha_{i,j}\sqrt{2\eta}\right),\ i = 1, \ldots, 2^b,\ j = 2, \ldots, w \tag{20}$$

where

$$\alpha_{i,j} \triangleq \frac{\varepsilon \left|(\mathbf{B}\mathbf{D})_{i,j}\right|}{\mu_j} \cdot \frac{\sqrt{b2^b}}{\|\mathbf{W}\|} \tag{21}$$

or, equivalently,

$$\alpha_{i,j} \triangleq \frac{\left(\left|\mathbf{W}\mathbf{M}^{\mathsf{T}}\right|(\mathbf{M}\mathbf{M}^{\mathsf{T}})^{-1/2}\right)_{i,j}}{\sqrt{\|\mathbf{W}\|^2/(b2^b)}} \tag{22}$$

Since $\mathrm{sgn}(\mathbf{W}\mathbf{M}^{\mathsf{T}}) = \mathbf{B}$, the matrix $\mathrm{abs}(\mathbf{W}\mathbf{M}^{\mathsf{T}})$ quantifies the amplitude of the eye opening before rectification, which yields a rough indication of error probability [4].

If we define the $2^b \times b$ matrix $\mathbf{A}$ whose entries are $\alpha_{i,j}$, $i = 1, \ldots, 2^b$, $j = 2, \ldots, w$, we may define a matrix with entries (20) and containing all the information needed to derive error probability bounds, viz.,

$$\mathbf{P}(e) \triangleq \mathrm{Q}\left(\sqrt{2\eta}\mathbf{A}\right) \tag{23}$$

Specifically, the sum of the entries of $\mathbf{P}(e)$ in row i is the upper union bound to the conditional error probability given that the ith information b-tuple is transmitted. An approximate unconditional upper bound (valid for high signal-to-noise ratios) is obtained by taking the largest entry of $\mathbf{P}$. Notice also that: (a) Equal rows of $\mathbf{A}$, and hence of $\mathbf{P}$, indicate that (at least from a union-bound point of view) all signal vectors are equally sensitive to the effects of noise, and (b) Equal entries in row i indicate that all symbols of ith source vector are equally sensitive to noise.

Example 1 Binary differential signaling is a special case of orthogonal vector signaling. This $(2, 1)$ line code has

$$\mathbf{W} = \begin{bmatrix} 1 & -1 \\ -1 & 1 \end{bmatrix} \tag{24}$$

which can be generated as the product $\mathbf{B}\mathbf{K}$, where

$$\mathbf{B} = \begin{bmatrix} 0 & 1 \\ 0 & -1 \end{bmatrix} \tag{25}$$

and $\mathbf{K}$ is the Hadamard matrix

$$\mathbf{K} = \begin{bmatrix} 1 & 1 \\ 1 & -1 \end{bmatrix} \tag{26}$$

Choosing $\mathbf{M} = \mathbf{K}$, we have

$$\mathbf{W}\mathbf{M}^{\mathsf{T}} = \begin{bmatrix} 0 & 2 \\ 0 & -2 \end{bmatrix} \tag{27}$$

so that $\mathrm{sgn}(\mathbf{W}\mathbf{M}^{\mathsf{T}}) = \mathbf{B}$, as it should be. Error probability can be evaluated by direct computation of

$$\mathbf{A} = \begin{bmatrix} 1 \\ 1 \end{bmatrix} \tag{28}$$

which yields

$$\mathbf{P}(e) = \begin{bmatrix} \mathrm{Q}(\sqrt{2\eta}) \\ \mathrm{Q}(\sqrt{2\eta}) \end{bmatrix} \tag{29}$$

consistent with (1). ■

Example 2 For a vector signaling scheme of Fig. 7, transmitting 2 bits over 3 wires with codebook matrix

$$\mathbf{W} = \begin{bmatrix} 1 & -1 & 0 \\ -1 & 1 & 0 \\ 1 & 0 & -1 \\ -1 & 0 & 1 \end{bmatrix} \tag{30}$$

start from matrix $\mathbf{B}$, whose 4 rows contain all "source" pairs of ± 1 with a 0 prepended:

$$\mathbf{B} = \begin{bmatrix} 0 & 1 & -1 \\ 0 & -1 & 1 \\ 0 & 1 & 1 \\ 0 & -1 & -1 \end{bmatrix} \tag{31}$$

The 3×3 decoding matrix reflecting the differences $(1-2)+(1-3)$ and $2-3$ is

$$\mathbf{M} = \begin{bmatrix} 1 & 1 & 1 \\ 2 & -1 & -1 \\ 0 & 1 & -1 \end{bmatrix} \tag{32}$$

where the all-1 first row is added in order to reduce the dimension by one by exploiting the balanced-current condition. We see that

$$\mathbf{W}\mathbf{M}^{\mathsf{T}} = \begin{bmatrix} 0 & 3 & -1 \\ 0 & -3 & 1 \\ 0 & 3 & 1 \\ 0 & -3 & -1 \end{bmatrix} \tag{33}$$

and hence $\mathrm{sgn}(\mathbf{W}\mathbf{M}^{\mathsf{T}}) = \mathbf{B}$, as it should be. Encoding is done by using the 3×3 coding matrix

$$\mathbf{K} = \mathbf{M} = \begin{bmatrix} 1 & 1 & 1 \\ 2 & -1 & -1 \\ 0 & 1 & -1 \end{bmatrix} \tag{34}$$

which yields, after choosing $\varepsilon = 1/2$ to obtain values in the interval $[-1, 1]$:

$$\frac{1}{2}\mathbf{B}\mathbf{K} = \begin{bmatrix} 1 & -1 & 0 \\ -1 & 1 & 0 \\ 1 & 0 & -1 \\ -1 & 0 & 1 \end{bmatrix} = \mathbf{W} \tag{35}$$

$\mathbf{M}$ and $\mathbf{K}$ have the property that the product $\mathbf{D} \triangleq \mathbf{K}\mathbf{M}^{\mathsf{T}}$ is a diagonal matrix:

$$\mathbf{D} = \mathrm{diag}(3, 6, 2) \tag{36}$$

and hence

$$\mathbf{M}\mathbf{M}^{\mathsf{T}} = \mathrm{diag}(3, 6, 2) \tag{37}$$

For error probability, we compute

$$\left|\mathbf{W}\mathbf{M}^{\mathsf{T}}\right| = \begin{bmatrix} 0 & 3 & 1 \\ 0 & 3 & 1 \\ 0 & 3 & 1 \\ 0 & 3 & 1 \end{bmatrix} \tag{38}$$

and $\|\mathbf{W}\| = 2\sqrt{2}$. Thus, the matrix $\mathbf{A}$ is given by

$$\mathbf{A} = \begin{bmatrix} \sqrt{3/2} & 1/\sqrt{2} \\ \sqrt{3/2} & 1/\sqrt{2} \\ \sqrt{3/2} & 1/\sqrt{2} \\ \sqrt{3/2} & 1/\sqrt{2} \end{bmatrix} \tag{39}$$

which shows that the four source 2-tuples have the same upper bound on error probability, while their second symbol is less protected from noise than the first one. ■

IV. Conclusions

Elaborating on ideas introduced in [4], [5], we have described some concepts leading to the design of line codes suitable for the transmission of b bits over $w = b+1$ wires. We have also shown how error probabilities can be approximated.

Appendix
Circuits for differential signaling

Fig. 5 illustrates the circuit realizing (2,1)–binary differential signaling in the two states where the receiver detects a positive or negative sign of the voltage across the resistor R. A current source supplies the current I and the transistors are conducting if the gate are set to H, while they are an open circuit if the gate are set to L. Depending on the controls on the transistor gates at the transmitter the current I flows in the different directions over the pair of wires through the resistor at the receiver end.

Fig. 6 illustrates the circuit realizing (3,2)–binary differential signaling in the two states where the receiver detects a positive or negative sign of the voltage across the nodes pairs 1, 2, and 3. Three currents I_1, I_2, I_3 are injected or extracted from the transmitter side through 3 wires connected to three resistors in a star configuration. The three currents must satisfy $I_1 + I_2 + I_3 = 0$ at the center node. Each wire is connected to a pair of transistors. The current will flow on the wire from TX to RX when the top transistor's gate is H and the bottom one is L. A zero current is obtained when both gates are L. The codewords (1, 0,-1), (-1, 0,1), (1,-1,0), (-1, 1,0), represent the currents values (I_1, I_2, I_3) and the voltages are given by

$$\begin{aligned} V_{12} &= R(I_1 - I_2) \\ V_{13} &= R(I_1 - I_3) \\ V_{23} &= R(I_2 - I_3) \end{aligned}$$

The signs of the voltages V_{12} and V_{23} provide the two information bits corresponding to the four codewords.

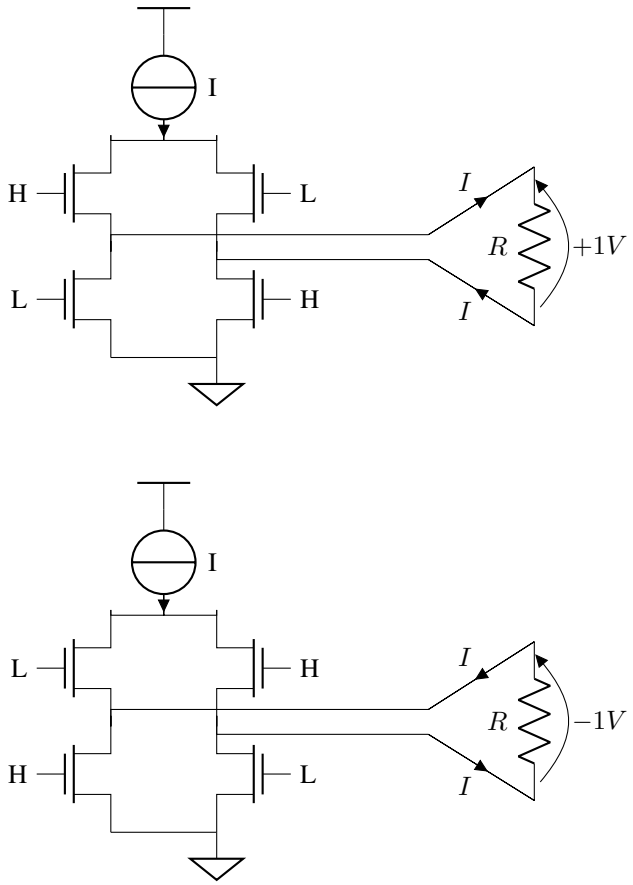

Fig. 5. The (2,1) Differential signaling circuit

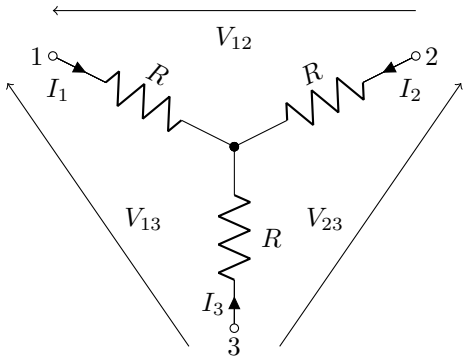

Fig. 6. The (3,2) Differential signaling circuit

ACKNOWLEDGMENT

The work of Ezio Biglieri is supported by ProjectTEC2015-66228-P. The work of Emanuele Viterbo is supported by ARC under Grant Discovery Project No. DP160101077.

REFERENCES

[1] A. Abbasfar, "Generalized differential vector signaling," *IEEE International Conference on Communications (ICC 2009)*, Dresden, Germany, June 14–18, 2009.

[2] E. Biglieri and M. Elia, "Optimum permutation modulation codes and their asymptotic performance," *IEEE Trans. Inform. Theory*, vol. 22, pp. 751–753, November 1976.

[3] E. Biglieri and E. Viterbo, "Geometrically uniform differential vector signaling schemes," *Submitted for publication*, January 2017.

[4] "A primer on chord signaling," Downloaded August 2016 from website https://www.kandou.com/technology/coding.

[5] H. Cronie and A. Shokrollahi, "Orthogonal differential vector signaling," Patent Application US 2011/0268225 A1, November 3, 2011.

[6] W. W. Peterson, "A note on permutation modulation," *IEEE Trans. Inform. theory*, vol. 43, no. 1, pp. 359-360, January 1997.

[7] D. Oh, F. Ware, W. Kim, J.-H. Kim, J. Wilson, L. Luo, J. Kizer, R. Schmitt, C. Yuan, and J. Eble, "Pseudo-differential signaling scheme based on 4b/6b multiwire code," *IEEE 17th Topical Meeting on Electrical Performance of Electronic Packaging (EPEP'08)*, San José, CA, pp. 29–32, October 27–29, 2008.

[8] A. Shokrollahi, "Vector signaling with reduced receiver complexity," Pub. No. US 2014/0376668 A1, December 25, 2014.

[9] A. Shokrollahi and R. Ulrich, "Vector signaling codes with increased signal to noise characteristics," Patent Application US 2016/0013954 A1, January 14, 2016.

[10] D. Slepian, "Permutation modulation," *IEEE Proceedings*, pp. 228–236, March 1965.

[11] E. Viterbo, "Permutation Codes," in *Encyclopedia of Telecommunications*. J. Proakis (ed.), John Wiley & Sons, 2002.